Assembly instruction

Amagi

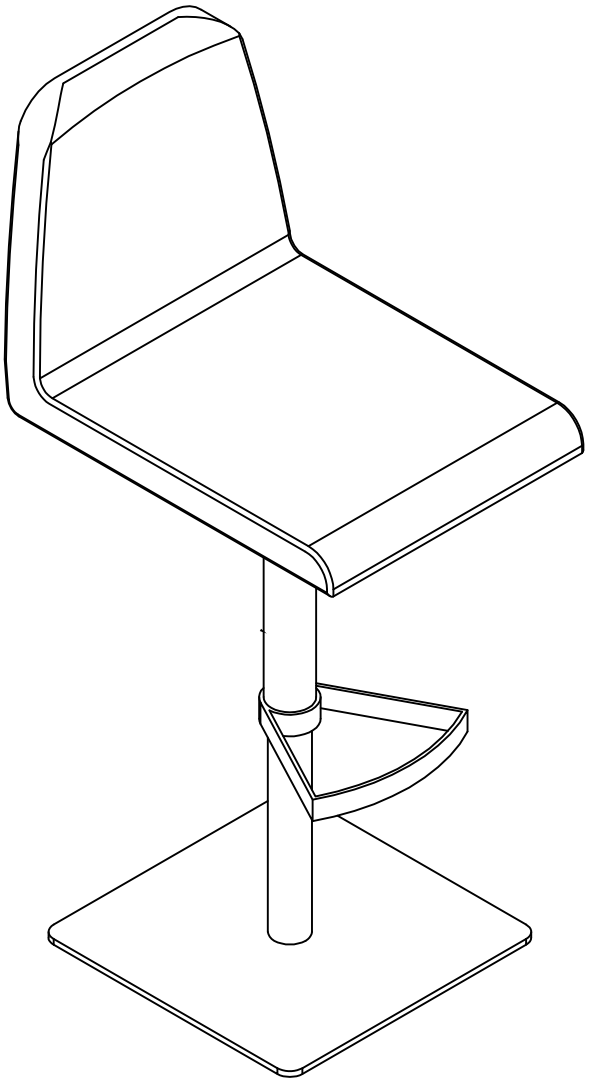

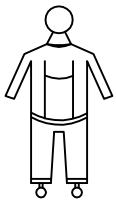

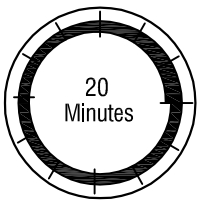

Assembly instruction

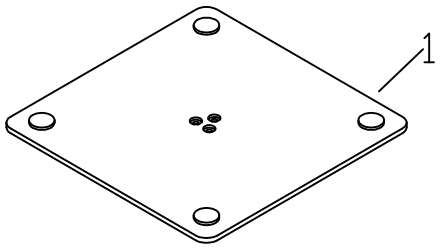

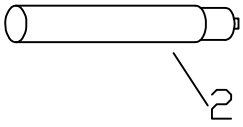

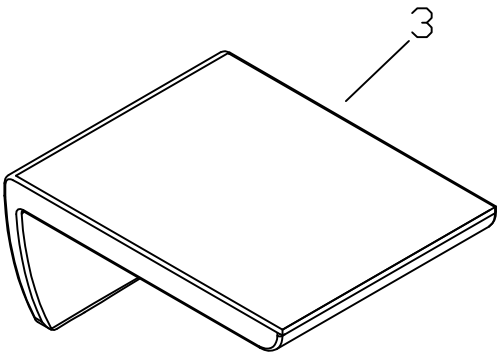

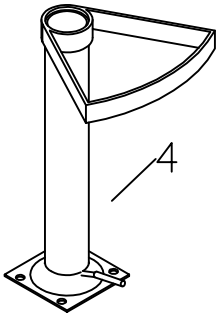

4mm
A x 1

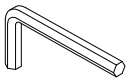

M6x12mm
B x 4

5mm
C x 1

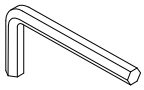

M8x30mm
D x 3

①

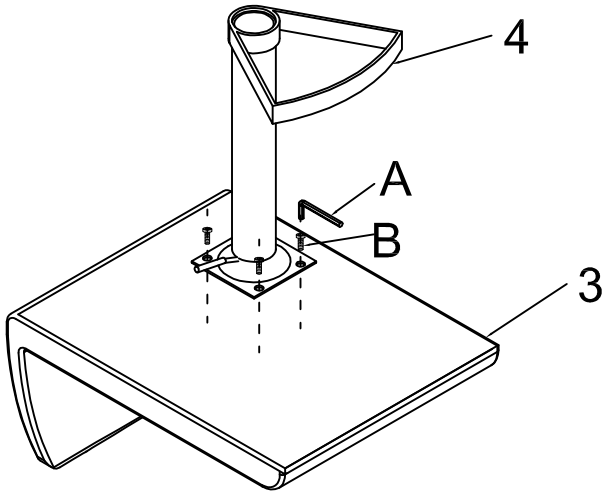

Assembly instruction

②

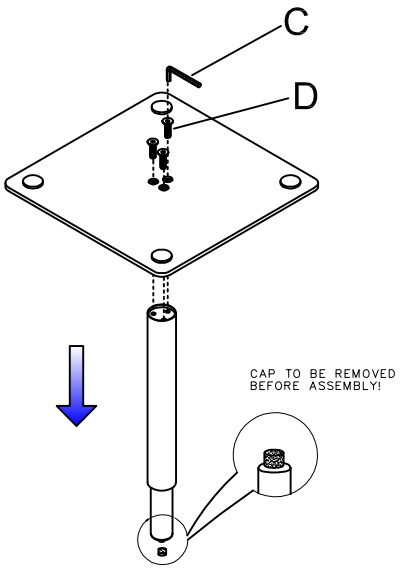

③

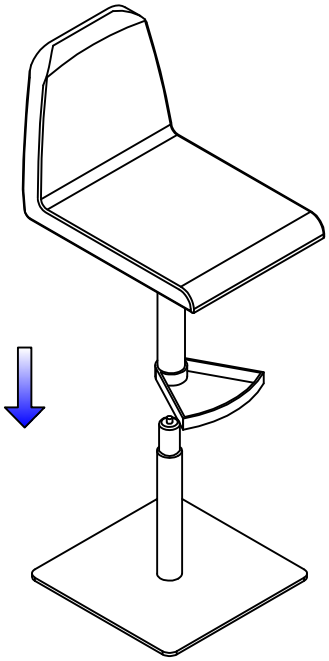
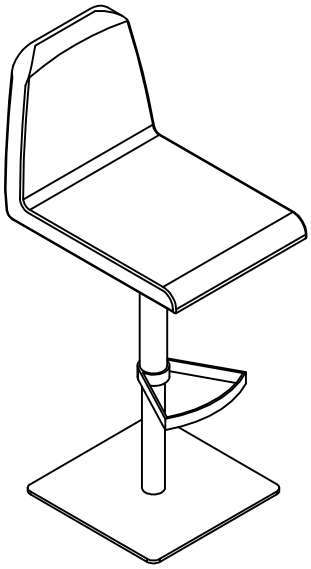
④